Detect in DAA: Air-based and Ground-based Sensing

CEC 300: Unmanned Aircraft Design

Instructor: Richard S. Stansbury
College of Engineering
Embry-Riddle Aeronautical University, Daytona Beach, FL

Airborne Detection

Learning Outcomes

- Identify and describe airborne cooperative detection sensors.
- Identify and describe airborne non-cooperative detection sensors.

Overview

- Airborne detection involves the use of sensors onboard the UAS to sufficiently detect and track an intruder.

- Cooperative and non-cooperative solutions exist
  - Cooperative – detection is dependent upon the equipage of the intruder with some cooperative technology.
    - e.g. Transponder, ADS-B, TCAS II, etc.
  - Non-cooperative – detection relies solely upon the sensor and sensor processing's capabilities to detect and track an intruder.

- Sensors can be active or passive:
  - Active – energy is emitted to aid the sensor in detecting the intruder
  - Passive – relies solely on external stimuli

TCAS – Big Picture

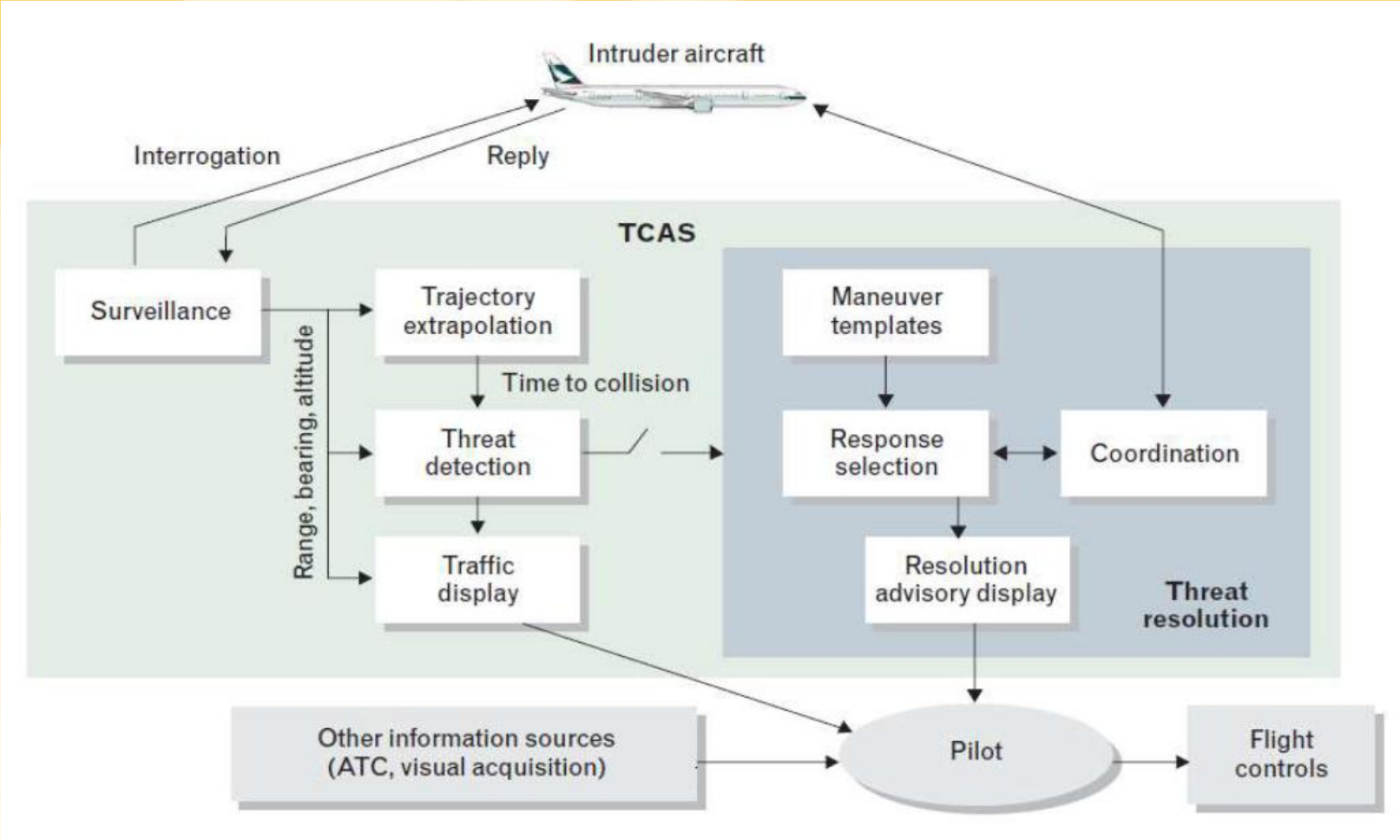

Transponders

Summary of Transponder Types

Type	Data	Compatibility	Other Notes
Mode 3/A	Ident (Squawk Code)		Reply to all interrogations
Mode C	Pressure Altitude	Often used in conjunction with Mode 3/A	Reply to all interrogations
Mode S	Pressure altitude (25 ft. increments) Call Sign and/or permanent address code (e.g. ICAO code)	Compatible with Mode 3/A and Mode C transponders	Supports anti-collision systems such as TCAS and ADS-B Interrogates specific transponders (filtering)
Mode 5	Encrypted Mode S Encrypted ADS-B position data		Military usage
Automatic Dependent Surveillance – Broadcast (ADS-B)	Callsign ICAO Address GPS Position Altitude (pressure and/or GPS) Velocity	Utilizes Mode S transponder for 1090 MHz (Extended Squitter) ADS-B	Two standards: • 1090MHz Extended Squitter • 978 MHz UAT
TCAS / ACAS	Traffic Advisories Resolution Advisories	Works in conjunction with Mode S transponder	• Interrogates other systems with TCAS

FLARM

- Designed primarily for glider use
- Similar to ADS-B
- Utilizes a digitally encrypted channel
- Alerts issued to both aircraft
- Supports up to 50 FLARM and ADS-B targets at a time
- Range 10km
- Some avionics integrated options

FLARM display

PowerFLARM display

Identification, Friend, or Foe (IFF)

- Challenge and reply
- Military platforms (often with ADS-B and Mode S integrated)

Non-Cooperative Airborne Sensors

Radar (Primary)

- Most versatile non-cooperative sensor
- Field of regard achieved through:
  - Antenna array
  - Actively scanning (mechanical or electronically steered antenna)
- Scanning approaches:
  - Must frequently revisit frame of tracked target, but does not want to waste time there versus exploring rest of the field of reference
  - Must be considered
- Must prioritize intruders given range.
- Outputs:
  - Range, range rate, azimuth, and elevation

- Standards developed by RTCA, SC-228,number DO-386.

Radar Considerations for UAS

- Requirements suggested by NATO NIAG Study Group 205

Parameter	Value
Horizontal FOR	+-110 degrees
Vertical FOR	+-15 degrees
Declaration Range	3-8nm
Azimuth angle accuracy	< 1 deg
Vertical angle accuracy	< 1 degree
Track capacity	> 20 intruders
Probability of false track	< 1 per hour

- Limitations:
  - Availably of frequency bands
  - Limited for small and non-metallic intruders
  - Reflections off grounds
  - Weather impacts some frequencies
- SWAP
  - Antenna volume / mounting
  - Computer volume and power
- TRL
  - 6-7 for large to medium UAS
  - 3-4 for smaller systems

Laser Systems

- Example: LIDAR – or laser range finder – emits laser light, which is reflected off of any surface it encounters.
- The time of flight between emission and receiving the reflection is used to measure distance.
- Parameters include:
  - Scan rate
  - Range
  - Resolution (angular distance between measurements)
- Can determine (dependent upon specifications):
  - Distance to target
  - Bearing to target
  - Trajectory of target
- Can operate through certain atmospheric features such as fog, but typically not suitable for aviation applications due to eye safety of other pilots

Cameras Overview

- Passive non-cooperative
- Factors:
  - Contrast and intensity of target illumination
  - Target temperature
  - Visual Range
  - Operating Altitude
  - Optics
  - Detector

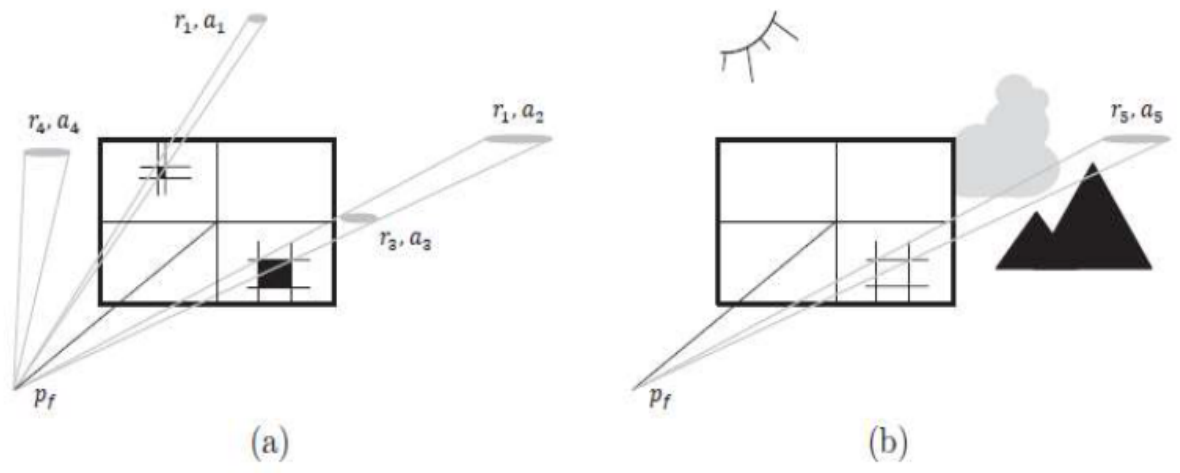

Figure 3-6- Factors affecting object detection and tracking.

The objects ($a1$, $a2$, $a3$, $a4$, $a5$) can be seen as variable sized ellipses (•), positioned at different distances ($r1$, $r2$, $r3$, $r4$, $r5$). The objects are projected onto the imaging surface with focal point pf. (a) Effects of field of view, spatial resolution and object size (b) Effects of sunlight (spectral reflectance and occlusion due to cloud cover and background clutter (terrain)

EO/IR Cameras Overview (2)

- Must consider the number of pixels sufficient to detect a target
- Johnson's Criteria – estimate of how number of pixels necessary to attain a certain level of interpretation of your target

Table 3-9: Johnson's Criteria and Conversion in Pixels

TASK	Resolution per Target Minimum Dimension		
	In Line Pairs	**In Pixel** (lp conversion)	**Assumed Pixel**
Detection	1.0 ± 0.25	2.0 ± 0.5	2
Recognition	1.4 ± 0.35	2.8 ± 0.7	3
Classification	4.0 ± 0.8	8.0 ± 1.6	8
Identification	6.4 ± 1.5	12.8 ± 3	16

EO/IR Performance and Comparison

Electro-Optical/Infrared Camera (EO/IR) – combine visible spectrum (EO) and thermal (IR) imaging enabling surveillance, targeting, and tracking.

- **Key Features:**
  - Electro-Optical (EO): Captures high-resolution images in the visible and near-infrared spectrum, ideal for recognizing objects and identifying targets during daylight or well-lit conditions.
  - Infrared (IR): Operates in the thermal spectrum, detecting heat signatures emitted by objects, enabling imaging in complete darkness or through obscurants like fog, smoke, or dust.

- **Applications:**
  - Military and Defense: Long-range surveillance, targeting, tracking, and reconnaissance.
  - Security: Monitoring critical infrastructure, border security, and perimeter defense.
  - Search and Rescue: Locating survivors in low-visibility conditions or open water.
  - Law Enforcement: Crowd monitoring, riot control, and emergency response.

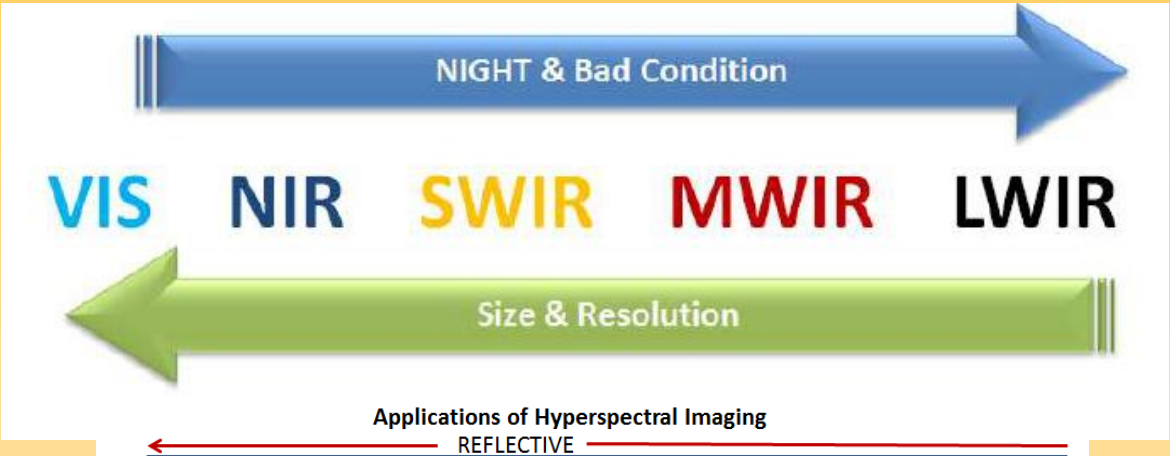

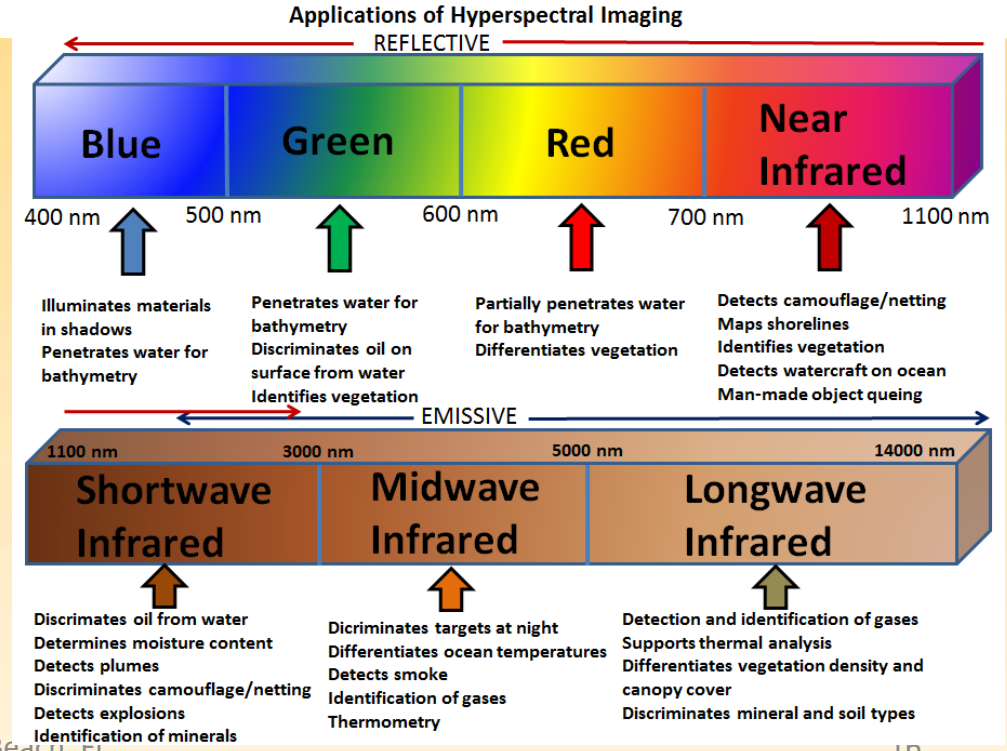

Acoustic Sensors

- Utilize an array of microphones and processors to analyze the sounds within the airspace surrounding the aircraft
- Can be capable of detecting and tracking local air traffic
- NASA Access 5 study indicated concern about high signal-to-noise ratio
- SARA Inc.'s Terrestrial Acoustic Sensor Array (TASA) – acoustic phased array
  - Detects aircraft, classifies threat, and can provide evasive maneuvers to automated vehicles such as UAS or UAM.

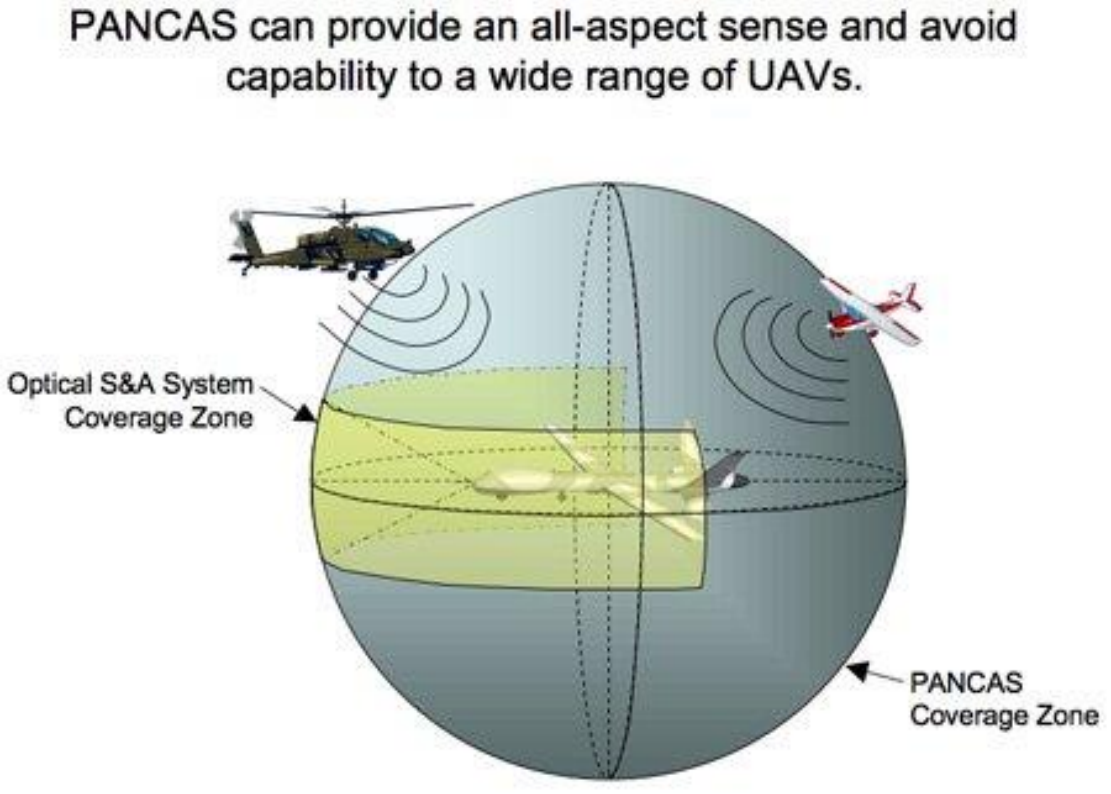

References

- NATO Industrial Advisory Group (NIAG) Study Group 205, "Final Report on NIAG Study Group 205 on Sense and Avoid Feasibility and Certification for UAS Flight in Non-Segregated Airspace"
- Stansbury and Wilson, "Technology Surveys and Regulatory Gap Analyses of UAS Sub-Systems toward Access to the NAS," In the *Handbook for Unmanned Aerial Vehicles*, 2014.
- Chris Reynolds and Timothy Wilson, "Regulatory Gap Analysis: Detect, Sense, and Avoid Technologies For UAS," FAA Technical Report, 2008.
- FAA TCAS Booklet, https://www.faa.gov/documentLibrary/media/Advisory_Circular/TCAS%20II%20V7.1%20Intro%20booklet.pdf
- Munoz and Nackawic, and Chamberlain. "A TCAS-II Resolution Advisory Detection Algorithm." AIAA GNC Conference 2013. Online at: https://shemesh.larc.nasa.gov/people/cam/publications/gnc2013-draft.pdf

DAA Ground-Based Detection

Learning Outcomes

- Identify and describe ground-based cooperative detection technologies.
- Identify and describe ground-based non-cooperative detection technologies.
- Identify and describe ground-based detection technologies that support both cooperative and non-cooperative.

Overview

- Ground-based systems utilize UAS tailored or existing ground infrastructure to support detection within detect-and-avoid.
- Communication is a consideration:
  - Communication of data with the UAS
  - Communication of data with the GCS
- Like airborne sensors, these sensors can be:
  - Cooperative – based upon suitable equipage for ownship and/or intruder
  - Non-cooperative – based solely upon the sensor's capabilities to extract information from its environment

Mixed Cooperative / Non-Cooperative

Ground-based Radar

- Ground-based radar can support the detection requirements of UAS detect-and-avoid
  - Organic:
    - UAS integrated radar
      - Radar is part of the integrated UAS "system-of-systems", i.e. it is dedicated to the UAS system configuration and integrated with the control station and/or command and control datalink.
  - Non-Organic:
    - ANSP radar (e.g. FAA ATC Radar)
      - Air traffic control from Air Navigation Service Providers (ANSP) such as the FAA's Air Traffic Control (ATC) / Air traffic Management (ATM) systems
    - 3rd Part Surveillance Services (e.g. flightradar24.com)
- Ground-based Radar types:
  - Primary Radar (cooperative and non-cooperative)
  - Secondary Radar (cooperative only)
  - Passive Radar (non-cooperative and cooperative)
- Note: these types are not exclusive to ground-based usage

Radar - Primary

- Detects **cooperative** and **non-cooperative** air traffic within a limited range.
- Issues:
  - Limited range (compared with secondary radar)
  - Can have difficulty discriminating between local aircraft and other airborne phenomena (e.g.. Birds)

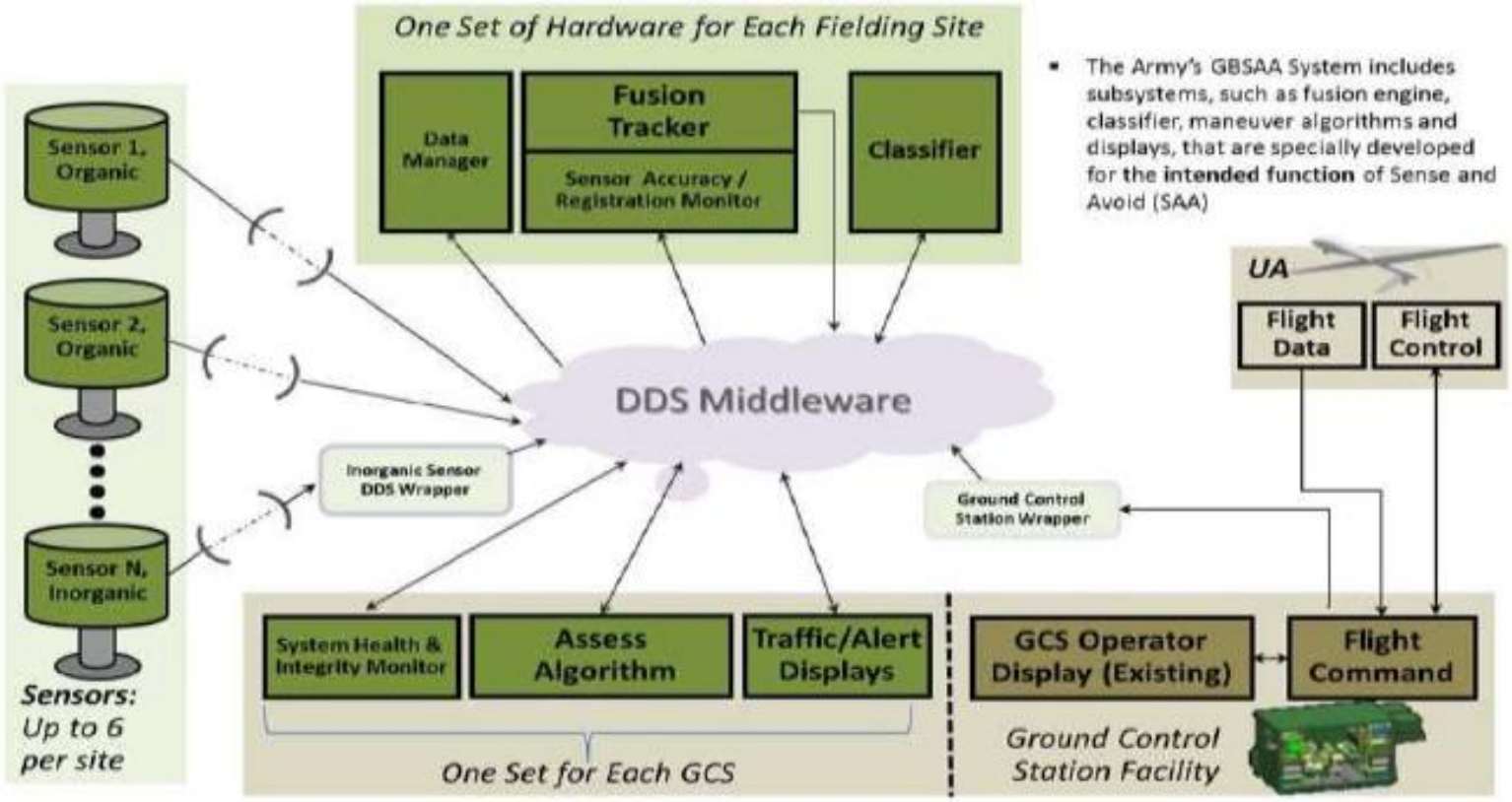

Figure 3-3 Block Diagram of US Army GBSAA

Cooperative Ground Sensors

Radar - Secondary

- Detects **cooperative** (transponder range than primary radar.

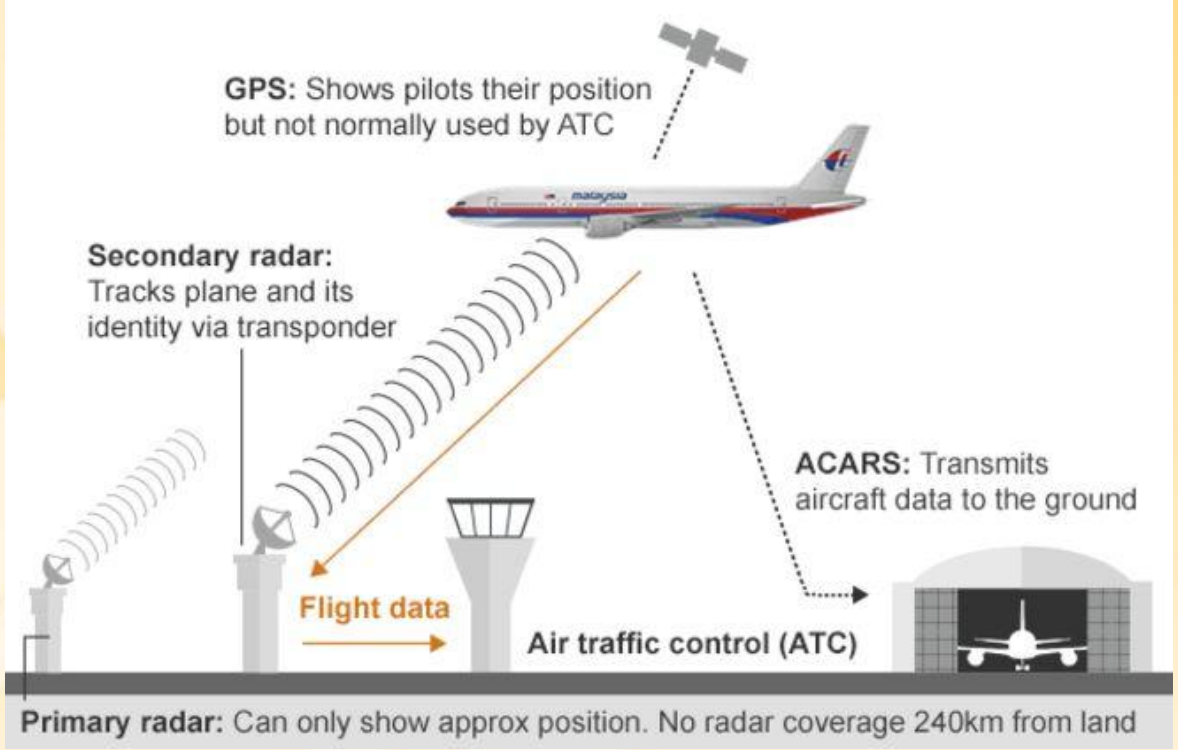

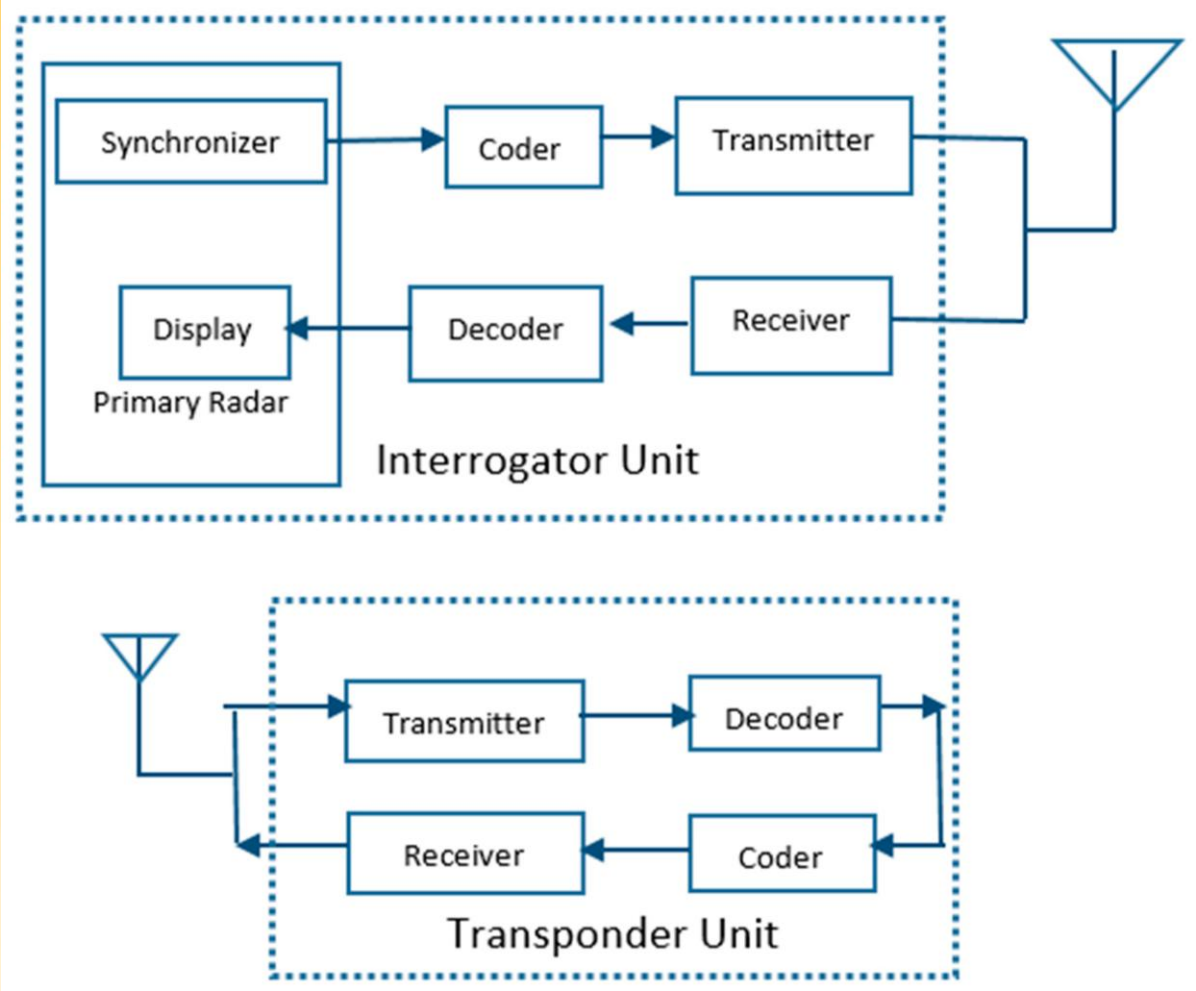

Traffic Information System – Broadcast (TIS-B)

- Similar to ADS-B and utilizes same frequencies:
  - 1090MHz ES
  - 978MHz UAT
- Summary of approach:
  - Utilizes ground-based radar (ATC radar) to detect local air traffic
  - Information is then transmitted via uplink to aircraft equipped with an ADS-B receiver
  - Ground-radar can detect non-ADS-B equipped aircraft so long as they have a Mode S or Mode C transponder

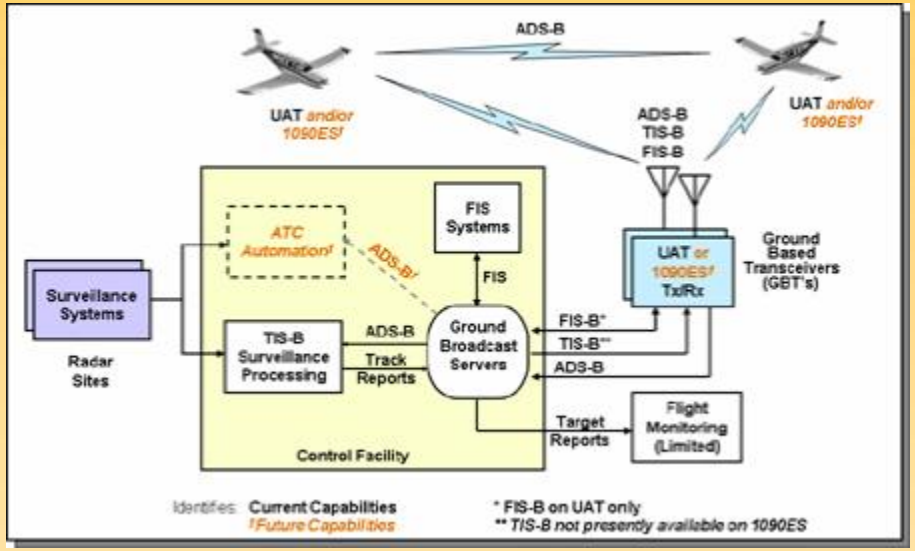

- Suitably equipped aircraft and control stations can receive information regarding local air traffic
  - ADS-B IN or Hybrid TCAS/ACAS system

Ground-based EO / IR cameras

- Provide imagery of a particular field-of-view
- Image processing can detect potential targets, relative motion, etc.
- Calculate 3D UAS trajectory in non-cooperative manner
  - 2+ optical tracker stations
  - Centralized communication
- Can fuse with other sources
- Detection Range
  - Depends on weather, size of target, focal lengths, etc.
  - IR camera – range of 35 km in clear weather
  - Visual – 20 km

Visual Observers (spotters)

- Observers the UAS flight and notifies pilot of UAS position, terrain/vegetation collision threats, and any perceived right-of-way issues with local air traffic
- Pilot-in-command has legal authority over the flight safety
  - They are responsible for ensuring well-clear of other air traffic and not the spotters.
- Types:
  - Ground-based Visual Observers
    - Located strategically along the mission area / flight path.
  - Airborne-based Visual Observers
    - Located onboard a chase aircraft
- Observers that assist in taxi, runway situational awareness, etc. are sometimes called “marshals”
- Required for Part 107

Summary

- Ground-based technologies can be cooperative, non-cooperative, or a mix of both.
  - ATC radar facilities typically provide both cooperative (secondary radar, ADS-B) and non-cooperative (primary radar)
  - Cooperative sensors include secondary radar, TIS-B, and wide area multilateration techniques
  - Non-cooperative sensors include primary radar, passive radar, EO/IR cameras, etc.
  - Visual observers can also play the role of non-cooperative detection

References

- NATO Industrial Advisory Group (NIAG) Study Group 205, “Final Report on NIAG Study Group 205 on Sense and Avoid Feasibility and Certification for UAS Flight in Non-Segregated Airspace”
- Stansbury and Wilson, “Technology Surveys and Regulatory Gap Analyses of UAS Sub-Systems toward Access to the NAS,” In the *Handbook for Unmanned Aerial Vehicles*, 2014.
- Chris Reynolds and Timothy Wilson, “Regulatory Gap Analysis: Detect, Sense, and Avoid Technologies For UAS,” FAA Technical Report, 2008.